Ultra-Precision Position Switches

Metrol

DPA-3SR1

Instruction Manual

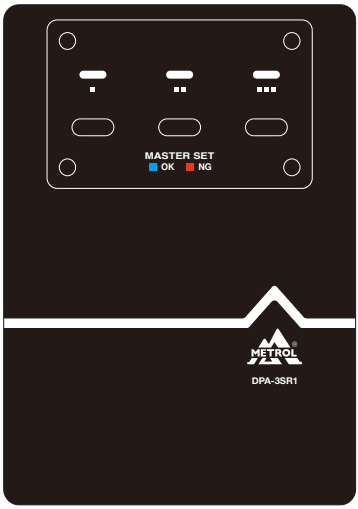

Contents

1.Overview

This machine uses non-contact measurement to measure air pressure, in order to determine gaps between workpieces and air nozzles at a high level of precision. It compares the current value with a preset gap master value. If the current value is narrower than the master value, the gap is determined to be OK. If it is wider, it is determined as NG.
It uses LEDs and signal output to indicate determination results.

The flow passage has three ports, and results are determined independently for each.
The master value is calculated from the port 1 master value, port 2 master value, and port 3 master value.

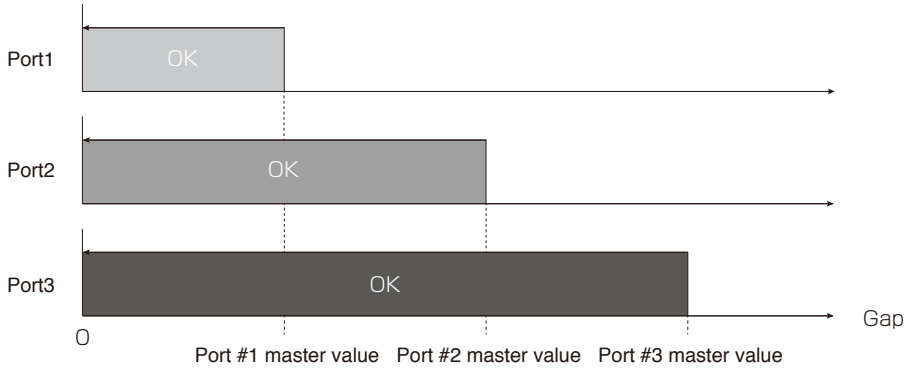

1-1. Features

① Capable of measuring with high repeat accuracy.
② Displays and outputs determination results independently for each of three ports.
③ Can be controlled using buttons or external input.
④ Enclosed in an IP67 dust-proof/waterproof structure.

2. Specifications

2-1. Absolute maximum ratings

Item	Value	Unit
Supply voltage	26.4	V
Input withstand voltage	26.4	V
Output withstand voltage	26.4	V
Output withstand current	20 each	mA
Supply pressure	300	kPa

(Note) Applying stress exceeding the absolute maximum ratings above may cause serious damage to internal structural parts.

2. Specifications

2-2. Specifications table

Product name		DPA-3SR1
Repeatability (Note 1) - (Note 4)		±0.5μm (master value：1～60μm) ±1μm (master value：60～100μm) **Air Pressure change : within ±1%**
Guaranteed repeat accuracy range (Note 1) - (Note 4)		1～100μm
Fluid used		Dry air (filtered to 5μm)
Setting pressure		150～200kPa
Consumption flow rate (Note 1) - (Note 4)		27ℓ/min（max）
Connection bore		Rc1/8
Recommended piping	SUP port	φ6×φ4
	OUT port (Note 5)	φ4×φ2.5, φ6×φ4
Response speed		Refer to response time characteristics graph (p.3)
Power supply voltage		DC24V±10%
Current consumption		Up to 100mA
Input specification		Photocoupler output: Non-voltage output with polarity DC24V±10%
Output specification		Photocoupler output: Non-voltage output with polarity (collector/emitter floating) Voltage: Up to 24 VDC±10% Current: Up to 20 mA Residual voltage 1.5 V or less (at 15 mA)
Cable		Standard length 3m Oil resistance φ5.5/16 cores AWG 28
Electrical response speed		10ms、20ms、80ms (can be set in SMOOTHING set mode)
Protective structure		IP67
Operating temperature range		0°C–60°C (no condensation)

(Note 1) Value obtained under conditions using the recommended air nozzle (p.7). If an air nozzle of a different shape will be used, verify on the actual machine before deciding.

(Note 2) Value obtained under conditions using the recommended piping. If a different piping diameter will be used, verify on the actual machine before deciding.

(Note 3) Value obtained under conditions using one nozzle per port. If multiple nozzles per port will be used, verify on the actual machine before deciding.

(Note 4) Value obtained under conditions using the included leakage unit.

(Note 5) The external shape of the connection tube for the attached leakage unit is Φ6.
A converter is required to connect a tube with an outer shape of Φ4.

2. Specifications

2-3. Response time characteristics

The response time is the time it takes for determination output to switch ON once a workpiece has been brought toward the air nozzle and has stopped moving (with air supplied to the machine). This will vary depending on factors such as the length and diameter of the piping from the OUT port to the air nozzle, the seating of the workpiece, and the supplied air pressure.The graphs below show response times when a workpiece is brought toward the air nozzle at a speed of 10 mm/sec. until the gap is reduced to the master value minus one (µm), when there is sufficient space between the air nozzle and workpiece.(For example, if the master is set at 20 µm, the response time is measured when the workpiece has been moved up to 19 µm.)

●Common test conditions

Air nozzle	ϕ1.5
Measurement port	Port 1
Workpiece movement speed	10mm/sec

●Measurement system

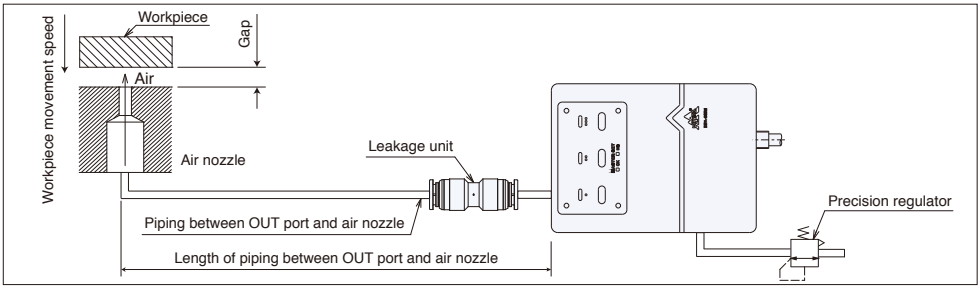

●Response time characteristic graph

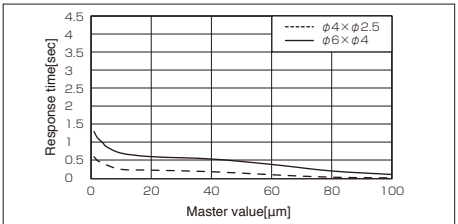

· Length of piping between OUT port and air nozzle : 1.5m
· Setting pressure : 150kPa

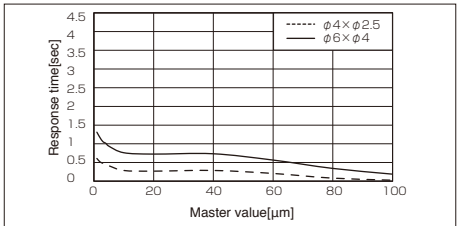

· Length of piping between OUT port and air nozzle : 1.5m
· Setting pressure : 200kPa

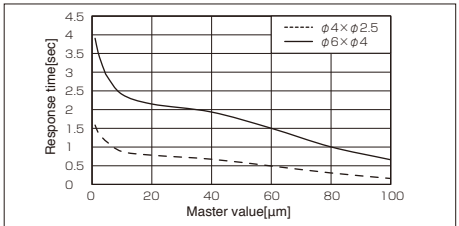

· Length of piping between OUT port and air nozzle : 5m
· Setting pressure : 150kPa

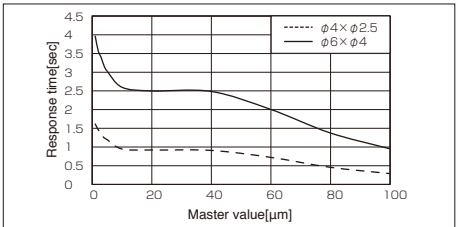

· Length of piping between OUT port and air nozzle : 5m
· Setting pressure : 200kPa

(Note 1) The response times shown in the above graphs are measurement values only and are not guaranteed.
(Note 2) There is no difference in response time by port.
(Note 3) There is no difference in response time by length of piping between the regulator and SUP port.

2. Specifications

2-4. Part names and functions

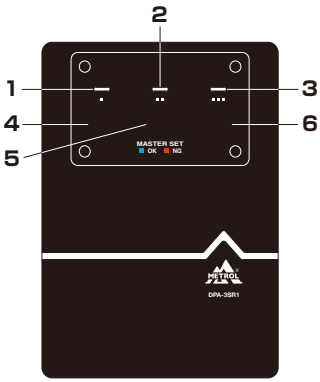

Item	Description
1. Port #1 LED	Determination results are displayed while in determination mode.Input complete can be verified in external master set mode.
2. Port #2 LED	
3. Port #3 LED	
4. Port #1master set button	Pressing and holding a button for at least one second while in measurement mode will set the master for the applicable port. Pressing and holding the port 1 master set button and port 3 master set button at the same time for at least five seconds while in measurement mode will switch to SMOOTHING set mode.
5. Port #2 master set button	
6. Port #3 master set button	

2-5. Electric circuit diagram

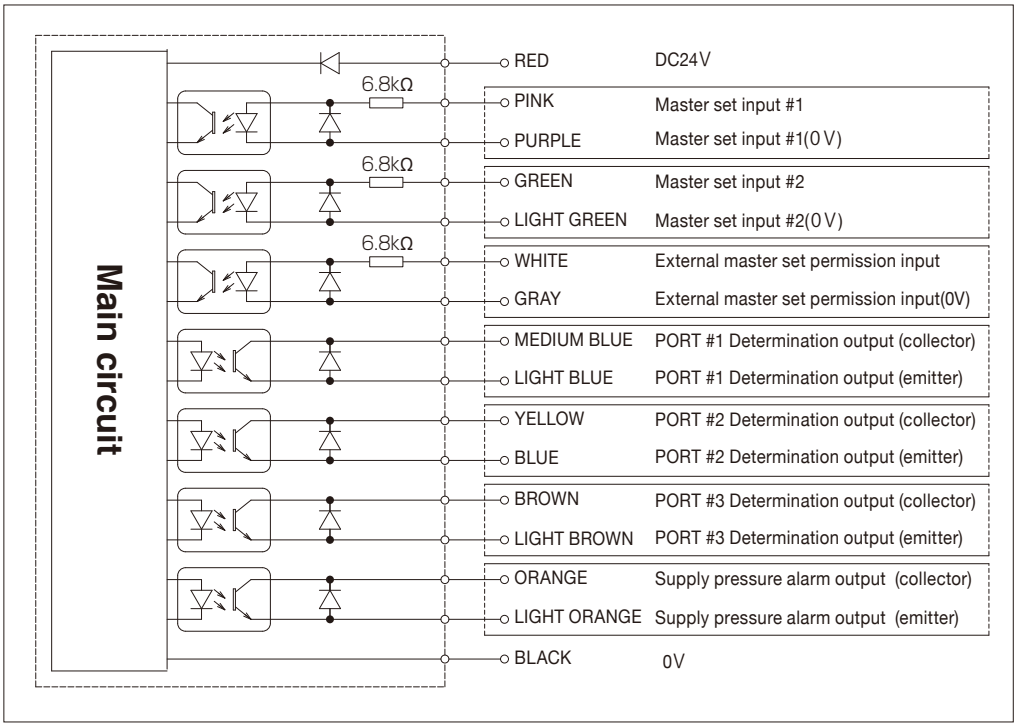

2. Specifications

2-6. Wiring

Color	Signal	Description		Example load connection
RED	DC24V±10%	Power supply		—
BLACK	0V			
PINK	Master #1 SET input	Master #1 can be set by turning ON for 100 ms while in STOP mode.	Master #3 can be set by turning ON for 100 ms simultaneously while in STOP mode.	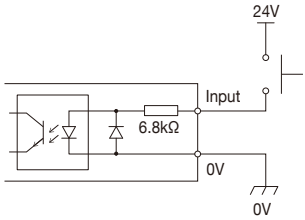
PURPLE	Master #1 SET 0V			
GREEN	Master #2 SET input	Master #2 can be set by turning ON for 100 ms while in STOP mode.		
LIGHT GREEN	Master #2 SET 0V			
WHITE	STOP input	Turns ON while in Measuring mode to move to STOP mode.		
GRAY	STOP 0V			
MEDIUM BLUE	Determination #1 (collector)	Outputs the master #1 determination in Measuring mode. Turns ON when the current value is at or below master #1. Turns ON for 200 ms as ACK for the master #1 set in STOP mode.		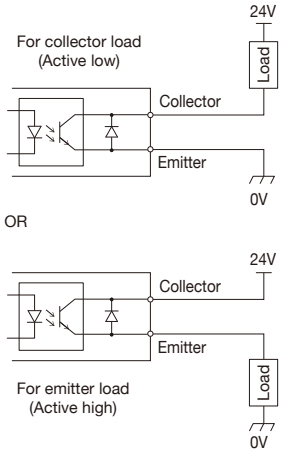
LIGHT BLUE	Determination #1 (emitter)			
YELLOW	Determination #2 (collector)	Outputs the master #2 determination in measurement mode. Turns ON when the current value is at or below master #2. Turns ON for 200 ms as ACK for the master #2 set in STOP mode.		
BLUE	Determination #2 (emitter)			
BROWN	Determination #3 (collector)	Outputs the master #3 determination in measurement mode. Turns ON when the current value is at or below master #3. Turns ON for 200 ms as ACK for the master #3 set in STOP mode.		
LIGHT BROWN	Determination #3 (emitter)			
ORANGE	ALARM (collector)	Turns ON while the supply pressure is normal.		
LIGHT ORANGE	ALARM (emitter)			

Connect the output in accordance with the design conditions.
Note: Individually isolate the unused input and output lines.

3. Operation Preparation

3-1. Fitting mounting

① Connect a fitting to either SUP port 1 or 2 in the figure shown below.
Insert a plug (attached) into whichever SUP port is not being used.

② Connect fittings to OUT ports 1 through 3 in the figure shown below.
Insert a plug into any unused OUT ports.

(Note 1) Fittings and OUT port plugs are not attached. They will need to be purchased separately.
(Note 2) Be sure to also use plumber's tape.

3-2. Body mounting

Use 4-M4 D6 on the mounting surface shown in the figure below to mount to the machine body.

(Note 1) In order to prevent backflow of coolant from the nozzle, mount the body as far above the air nozzle as possible.
(Note 2) Select a position that ensures that the piping is as short as possible between the OUT port and air nozzle, and between the SUP port and regulator.

● **Outer dimension**

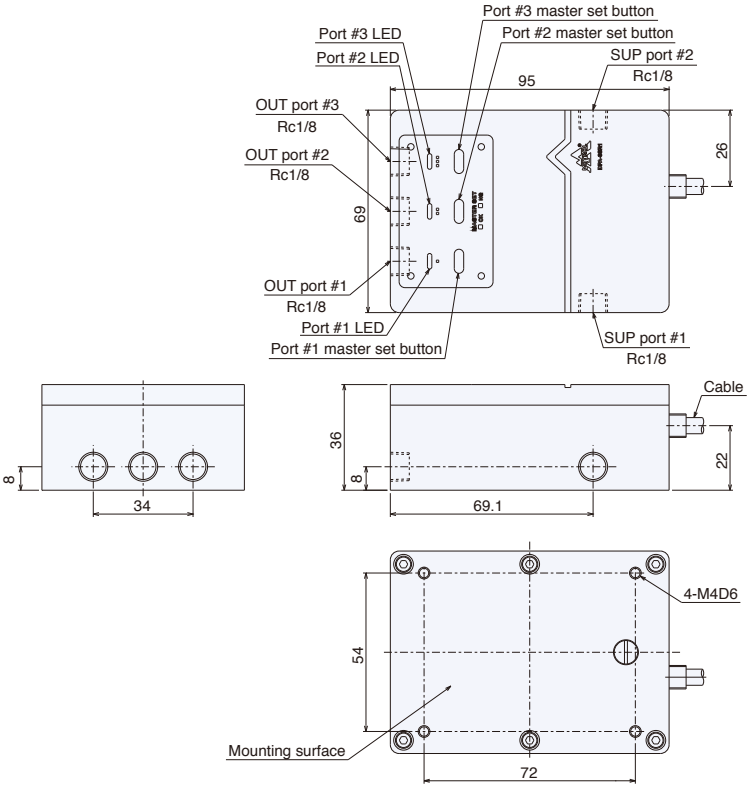

3. Operation Preparation

3-3. Air piping connections

Refer to the piping example. Connect the precision regulator and air filter to either SUP port 1 or 2, and connect the air nozzle and leakage unit to OUT ports 1 through 3.

● **Piping example** (Note1)(Note3)

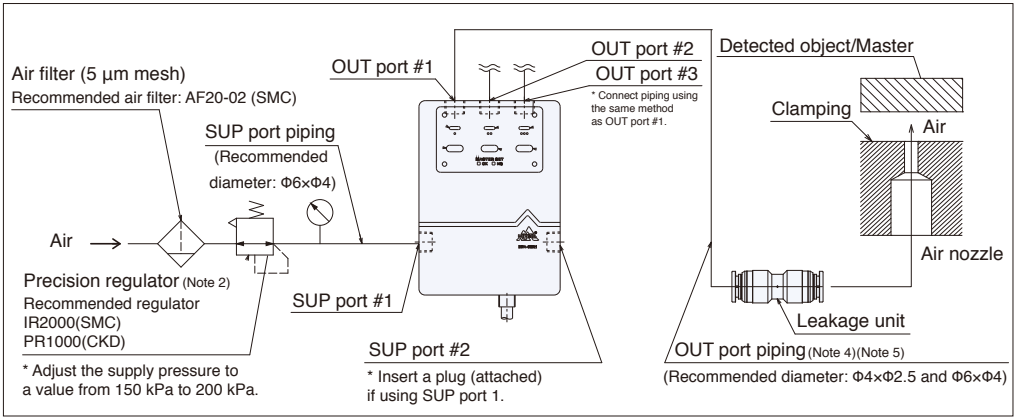

●**Recommended nozzle shape** (Note 6)

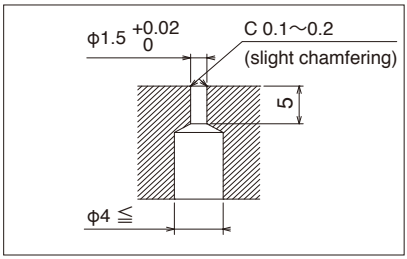

●**Leakage unit shape** (Note 7)

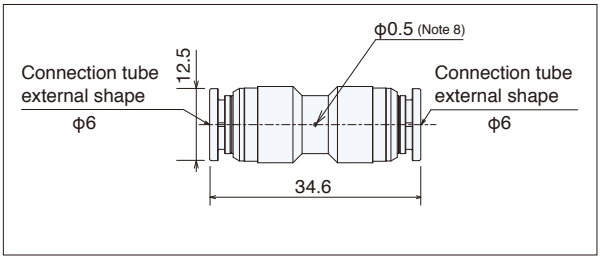

(Note 1) The precision regulator, air filter, and piping are not attached. They will need to be purchased separately.

(Note 2) Use a precision regulator. (Repeatability must be within ±0.5%)

(Note 3) Supplying air of 300 kPa or higher to the machine could damage internal structural parts. Adjust the supply pressure to a value from 150 to 200 kPa before connecting piping.

(Note 4) Do not use devices or fittings which could cause air leaks or resistance on the piping from the OUT ports to the air nozzle.

(Note 5) The external shape of the connection tube for the attached leakage unit is Φ6. A converter is required to connect a tube with an outer shape of Φ4.

(Note 6) Air nozzles are not attached. They must be produced by the customer based on the recommended air nozzle shape.

(Note 7) Install the leakage unit in a location that will not be exposed to coolant and cuttings when air is stopped.

(Note 8) Ensure that the hole on the leakage unit is not blocked.

4. Display at Power On

When the power is turned on, the LEDs blink blue and then the machine begins normal operation.
If there is a memory error, the LEDs will blink red when the power is turned on.
The machine cannot be operated normally in this state. Contact us for support.

5. Supply Pressure Alarms

A supply pressure alarm occurs when the supply pressure falls outside of the specification range.
DPA-3SR1 has the following supply pressure alarms.

Alarm name	LED display			Supply pressure alarm outout	Details
	Port #1LED	Port #2 LED	Port #3 LED		
100kPa alarm	ON (red)	OFF	OFF	OFF	The supply pressure is 100kPa or less
220kPa alarm	OFF	OFF	ON (red)	OFF	The supply pressure is over 200kPa
±10kPa alarm	Applicable LED blinks purple			OFF	Supply pressure changes ±10 kPa or more from when master was set

(Note) A supply pressure of 150 kPa is set for the master at the factory.
This could trigger the ±10 kPa alarm depending on the pressure being supplied.
Set the master first before use.

6. Modes

6-1. Overview of modes

DPA-3SR1 has the following modes.

Mode	Description	How to enter the mode
Determination mode	Compares the master values and current value and outputs the determination results. The master can be set via button input. Setting the master via external input is prohibited.	Turn external master set permission input OFF.
External master set mode	Stops determination and turns outputs other than supply pressure alarms OFF. The master can be set via external input. Setting via button input is prohibited.	Turn external master set permission input ON while in determination mode.
SMOOTHING set mode	Stops determination and turns all outputs OFF. The averaged count for pressure measurement can be changed using by pressing either button.	Press and hold the port 1 master set button and port 3 master set button at the same time for at least five seconds while in determination mode.

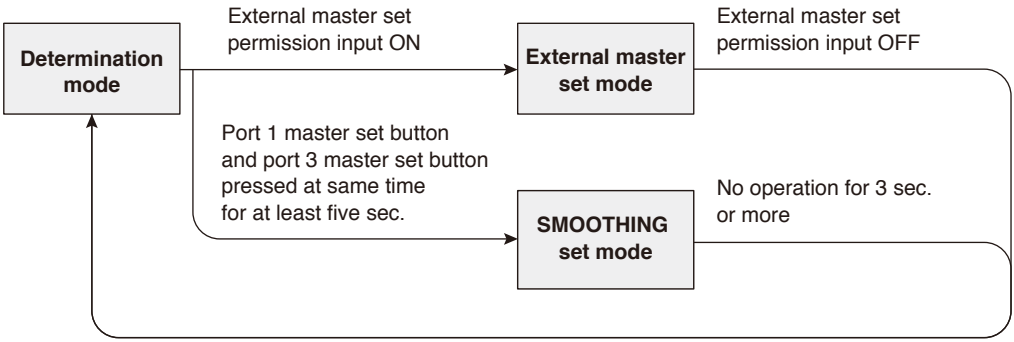

6. Modes

6-2. Determination mode

When the external master set permission input is OFF, the machine switches to determination mode. While in determination mode, it continuously compares the current value with the preset master value, and indicates the determination results using the LEDs and outputs.

LED display and output in Measuring mode

	Item	OK determination	NG determination	Master set complete			During supply pressure alarm		
				Port #1	Port #2	Port #3	100kPa alarm	220kPa alarm	±10kPa alarm
Display	Port #1 LED	Applicable LED ON (**blue**)	Applicable LED ON (**red**)	**blue**/lit ↓ **blue**/blink	OFF	OFF	**red**/blink	OFF	Applicable LED blinking **purple** (other LEDs respond to determination)
	Port #2 LED			OFF	**blue**/lit ↓ **blue**/blink	OFF	OFF	OFF	
	Port #3 LED			OFF	OFF	**blue**/lit ↓ **blue**/blink	OFF	**red**/blink	
Output	Port #1 determination	Applicable output ON	Applicable output OFF	Responds to determination			OFF	OFF	Applicable output ON (other LEDs respond to determination)
	Port #2 determination								
	Port #3 determination								
	Supply pressure alarm	Responds to supply pressure alarm status							OFF

Example

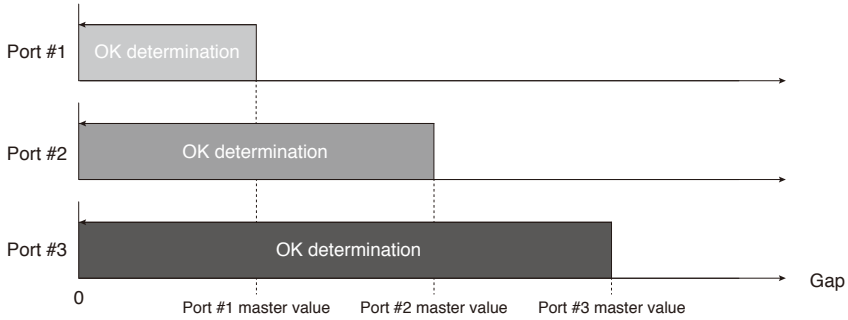

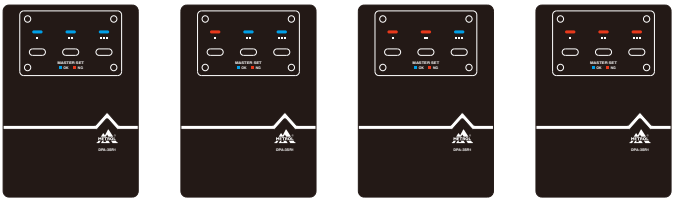

6. Modes

6-3. External master set mode

When the external master set permission input is ON, the machine switches to external master set mode. Outputs other than supply pressure alarms are turned OFF and the master can be set via external input. The master can be set via external input when all LEDs are blinking blue (supply pressure normal) or blinking purple (supply pressure changes ±10 kPa or more from when the master was set).

External master set mode LEDs and outputs

	Item	Supply pressure normal	Master set complete			During supply pressure alarm		
			Port #1	Port #2	Port #3	100kPa alarm	220kPa alarm	±10kPa alarm
Display	Port #1 LED	**blue**/blink	**red**/lit	OFF	OFF	**red**/lit	OFF	Applicable LED blinking **purple** (other LEDs respond to determination)
Display	Port #2 LED		OFF	**red**/lit	OFF	OFF	OFF	
Display	Port #3 LED		OFF	OFF	**red**/lit	OFF	**red**/blink	
Output	Port #1 determination	OFF	For 200 ms ON (ACK) ↓ OFF	OFF	OFF	OFF	OFF	OFF
Output	Port #2 determination		OFF	For 200 ms ON (ACK) ↓ OFF	OFF			
Output	Port #3 determination		OFF	OFF	For 200 ms ON (ACK) ↓ OFF			
	Supply pressure alarm	ON	Responds to supply pressure alarm status					

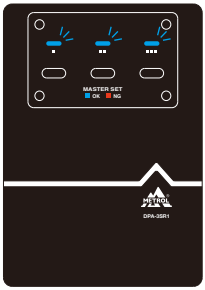

6-4. SMOOTHING set mode

Pressing and holding the port 1 master set button and port 3 master set button at the same time for at least five seconds while in determination mode will switch to SMOOTHING set mode.
If there is no operation for 3 seconds or more in SMOOTHING set mode, the mode will automatically switch to determination mode.
Press any of the buttons while in SMOOTHING set mode to switch the averaged count for pressure measurement from 4 to 16 and then to 64.
The electrical response time will be 10 ms, 20 ms, and 80 ms, respectively.
The averaged count is set to 4 at the factory.

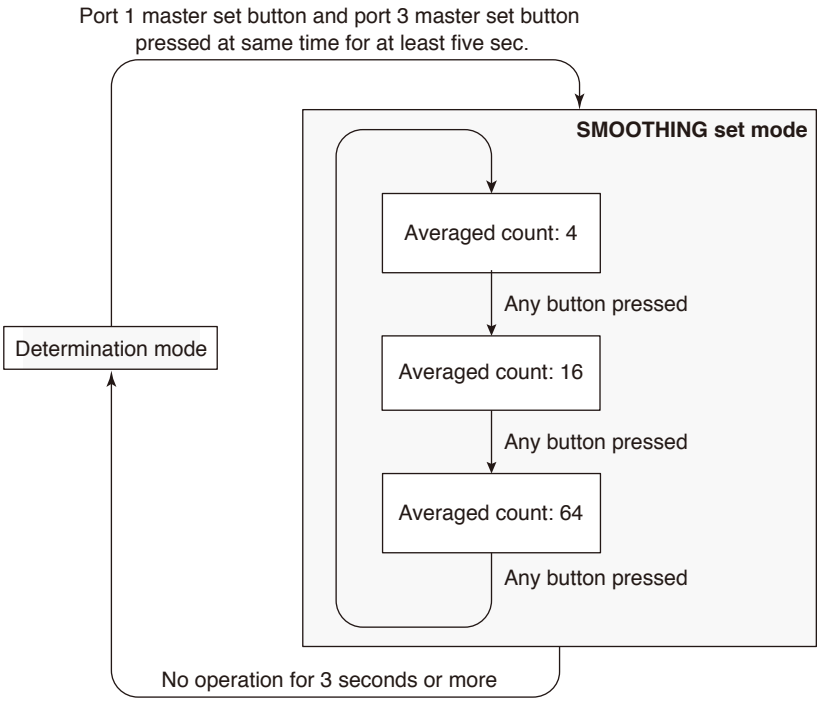

SMOOTHING set mode LEDs and outputs

	Item	Averaged count: 4	Averaged count: 16	Averaged count: 64
Display	Port #1 LED	**red**/blink	**purple**/blink	**blue**/blink
	Port #2 LED			
	Port #3 LED			
Output	Port #1 determination	OFF	OFF	OFF
	Port #2 determination			
	Port #3 determination			
	Supply pressure alarm			

7. Master Setting

Master setting refers to using a master workpiece to set the master value, which is a threshold value used for determination. The master can be set in determination mode and in external master set mode. Refer to the table below, as the method for setting the master differs by mode.

Mode	Master setting		ACK output
	Button input	External input	
Determination mode	Y	N	N
External master set mode	N	Y	Y

(Note 1) The master values are saved even when the power is turned off.
(Note 2) If the measurement system changes, make sure to set the master again.

7-1. Example of setting master workpiece (same for all modes)

When setting the master, set a gap to serve as the master value as shown in the examples in the figures below.

(1) If using a shim

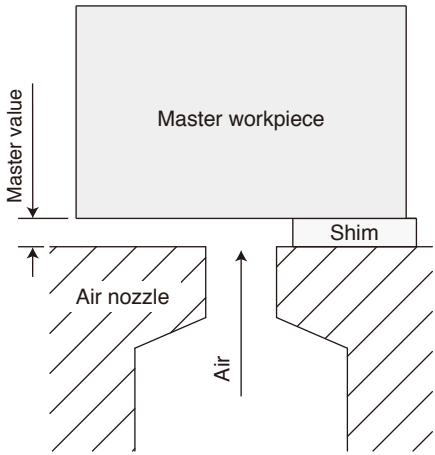

(2) If using a master workpiece with a gap

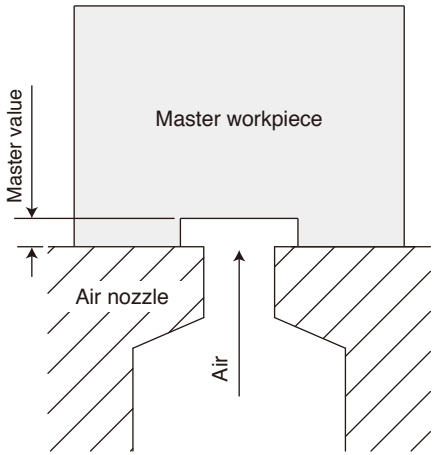

7. Master Setting

7-2. Master setting via button input (determination mode)

The master can be reset by setting the master workpiece in place and then pressing the button corresponding to each port for at least 1 second in determination mode.
Refer to the figure below for details.

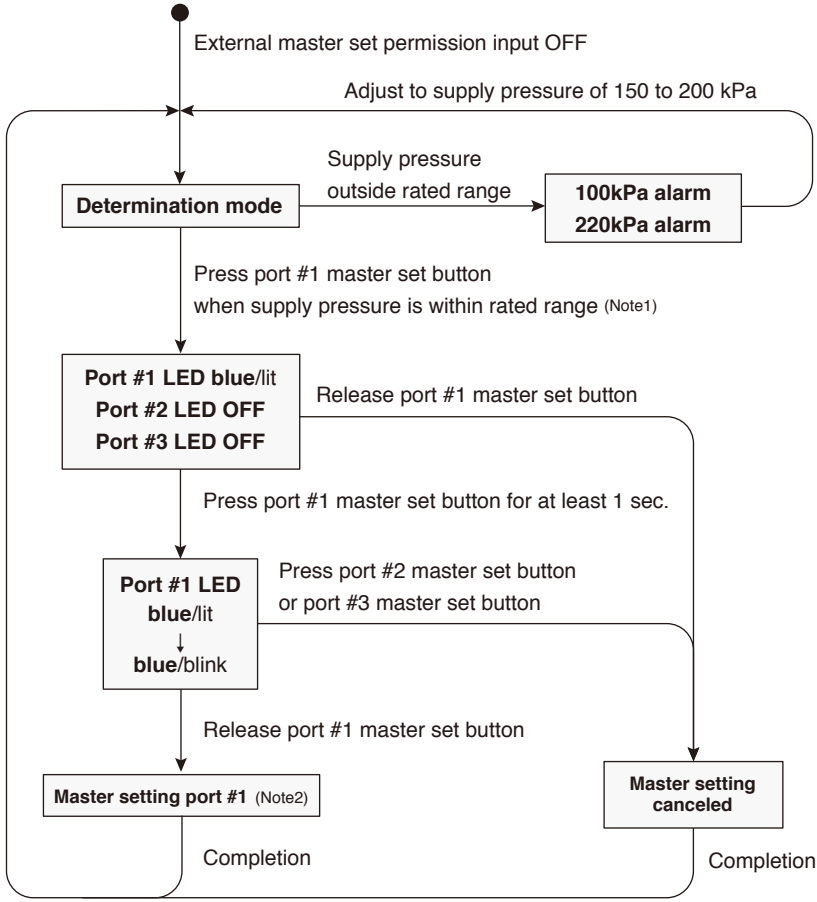

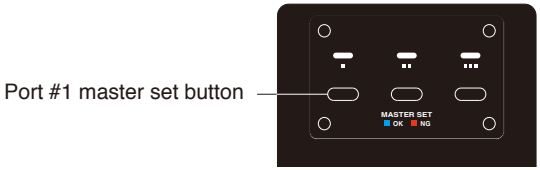

(Note 1) The master can be set even during a ±10 kPa alarm, if the supply pressure is within the rated range.
(Note 2) The master can be set for port #2 and port #3 by using the same procedure for port #1 and pressing the corresponding button.The master does not need to be set for port #1, port #2, and port #3 in any particular order.

7. Master Setting

7-3. Master setting via external input (external master set mode)

The master can be reset by setting the master workpiece in place and then inputting a pulse corresponding to each port in external master set mode. Refer to the figure below for details.

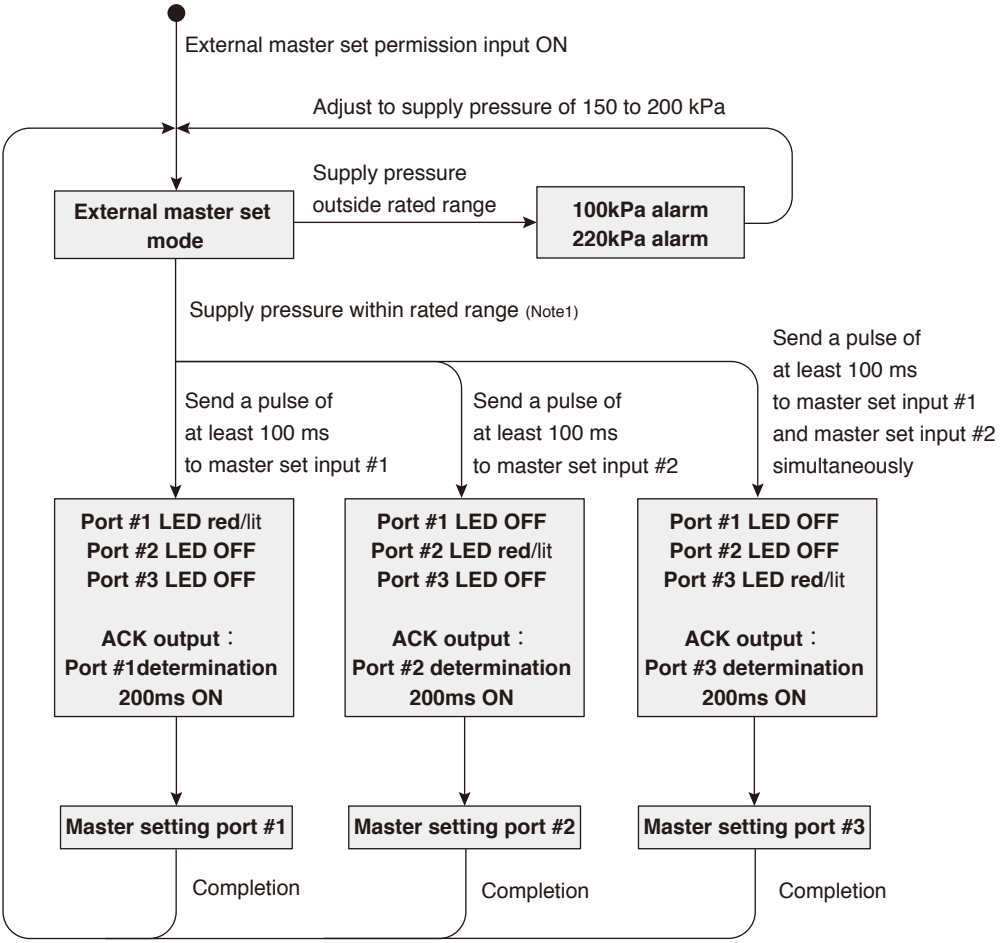

(Note 1) The master can be set even during a ±10 kPa alarm, if the supply pressure is within the rated range.

(Note 2) The master does not need to be set for port #1, port #2, and port #3 in any particular order.

7. Master Setting

Timing chart

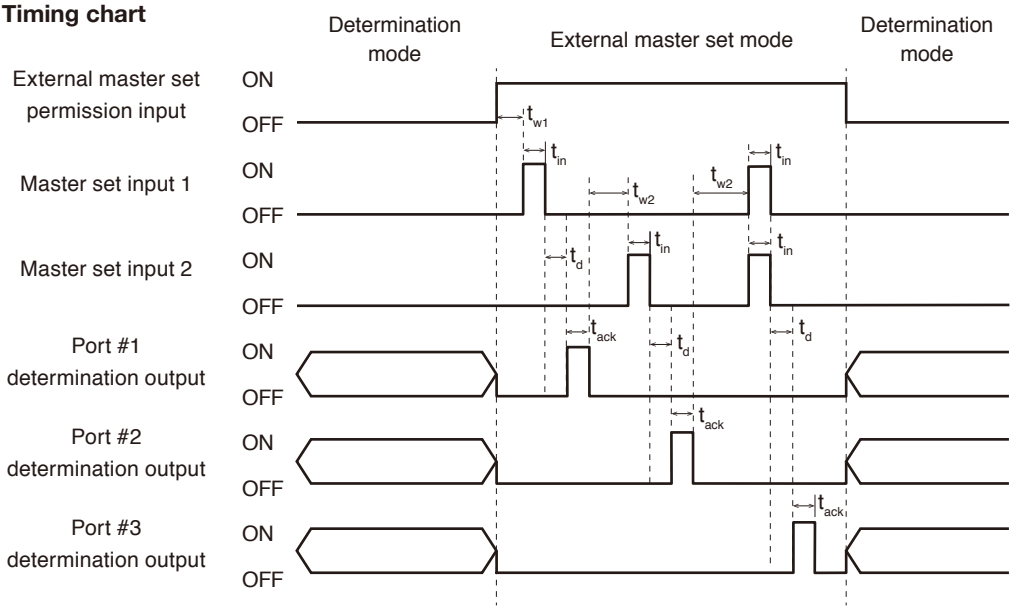

Timing definition

Parameter		MIN	MAX	Unit
Time from external master set permission input start until set input	t_{w1}	100		ms
Set input time (pulse width)	t_{in}	100		ms
Time from set input completion to set input	t_d		100	ms
ACK output time (pulse width)	t_{ack}	200	220	ms
Time from set input completion to ACK output	t_{w2}	100		ms

8. Frequently-asked Questions (FAQs)

1. Specifications

Q.1-1 Is distance output as an absolute value?

A.1-1 No. Gaps are determined as being either above or below the master value only. (Refer to p.1)

2. Wiring

Q.2-1 Should the output line be connected to either the collector or the emitter?

A.2-1 No. This is the photocoupler output and must be connected to both.
Refer to the connection examples shown in "Wiring" (p.5) for information on how to connect it.

Q.2-2 Does the output line switch between 24 V and 0 V?

A.2-2 No. This is the photocoupler output so it switches between conducting and isolated.
Refer to the connection examples shown in "Wiring" (p.5) for information on how to connect it.

Q.2-3 Does the output line switch between 24 V and 0 V?

A.2-3 Yes. This is the photocoupler output so it does have polarity.
Refer to the connection examples shown in "Wiring" (p.5) for information on how to connect it.

3. Pressure alarm

Q.3-1 When the machine first starts up, the LEDs blink purple and the supply pressure alarm output is OFF.
Is this a supply pressure alarm?

A.3-1 A supply pressure of 150 kPa is set for the master at the factory.
This could trigger the ±10 kPa alarm depending on the pressure being supplied.
Set the master first before use. (Refer to p. 13)

Q.3-2 The pressure gauge shows that the machine is operating within the rated pressure range,
but a pressure alarm is triggered. Is this a failure?

A.3-2 First check for air leaks or blockages in the piping from the pressure gauge and machine,
as well as any connected devices that could be providing resistance.

4. Determination mode

Q.4-1 The LEDs and determination output do not change. Is this a failure?

A.4-1 Check whether a pressure alarm has been triggered. (Refer to p. 8)
Check whether the machine is in determination mode. (Refer to p. 9)
The master may not have been set correctly.
Check the conditions and then set the master again.
If checking these shows no problems, check for blockage in the air nozzle, leakage unit,or piping;
air leaks from the sensor to the air nozzle (outside of the leakage unit);
or any devices connected that could be providing resistance.

Q.4-2 The LEDs switch to normal but output stays OFF. Is this a failure?

A.4-2 The output cable may not be connected properly or may be disconnected.
Refer to the connection examples shown in "Wiring" (p. 5) for information on how to connect it.

Q.4-3 The LEDs switch to normal but output stays ON.

A.4-3 The output cable may not be connected properly.
Confirm that it is connected with proper polarity.
Refer to the connection examples shown in "Wiring" (p. 5) for information on how to connect it.

Q.4-4 The machine does not reach the repeat accuracy listed in the specifications table. Why?

A.4-4 The repeat accuracy listed in the specifications table is guaranteed only under recommended conditions.
Refer to the recommended values for gap distance, piping, and air nozzle shape. If different conditions
are being used, verify use on the actual machine to determine whether use is possible.

The specifications and descriptions are subject to change without notice due to improvements in products.

High-Precision Positioning Switch
METROL® Metrol

METROL CO., LTD.
1-100 Takamatsu-cho Tachikawa, Tokyo 190-0011 JAPAN
Tel: +81 50 5558 7366 / Fax: +81 42 528 1442
E-mail: touchsensor@metrol.co.jp

GM-DPA-3SR1-E-K001